浚洸光學科技股份有限公司
Chun Kuang Optics Corp.

Product Model Number

CKO-CH15-045021-1670

✓ Model Number Definitions

CKO-XXXX-XXXXXX-XXXX
Ⓐ Ⓑ Ⓒ Ⓓ Ⓔ

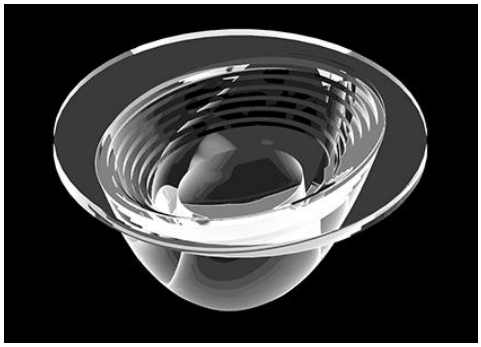

A. Chun Kuang Optics Corp. Product
B. Product Type: product abbreviation
Ex:
CH→CoB High Intensity
CC→CoB Compact
CS→Soft Shading for CoB LED
HC→Holder for CoB LED

C. Identity Code
D. Lens / Fixture Size
Ex: 075026=Φ75mm / Thickness=26mm (round up)
C. Serial Numbers

The lens datasheet is applicable for **OSRAM** **LED**, that manufactured by Chun Kuang Optics Corp.

✓ Dimensions (mm) : Φ45 x 20.9

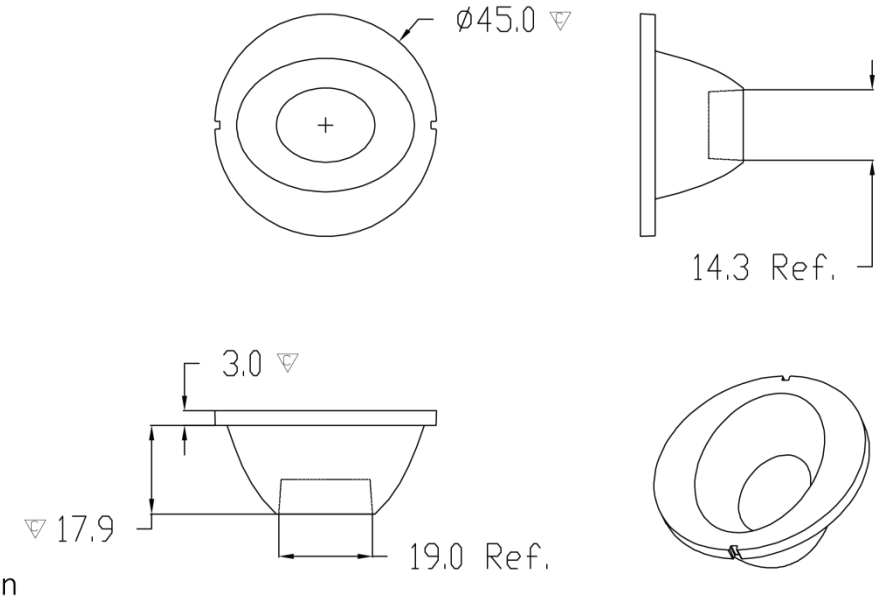

▽:Critical Dimension

Chun Kuang Optics Corp.
5F.,No. 122-8, Jhonghua Rd, Hukou Township, Hsinchu County 303 , Taiwan
TEL : +886-3-6960168 / FAX : +886-3-6960228 / E-mail: sales@ckoptics.com

2019/6/3

✓ Optical Characteristics – Angle Performances

OSRAM	LED LES (mm)	FWHM (degrees)	Field Angle (degrees)
S9 GW KAFHB3.EM	Φ9.8	38°x68°	81°x93°
S9 GW KAFJB3.EM	Φ9.8	37°x67°	80°x92°

Optical Characteristics

Model Number	CKO-CH15-045021-1670	
LED	**S9 GW KAFHB3.EM**	
LES / LED Size	Φ 9.8 mm	
FWHM (D50)	38°x68°	
Field Angle (D10)	81°x93°	
H (distance)	2.5mm	
Dimension	Φ =45 mm, Thickness=20.9 mm	
Luminous Flux	1419 lm	Measured @ 10.6 W
Material	PC / UL94V2	

"H" definition

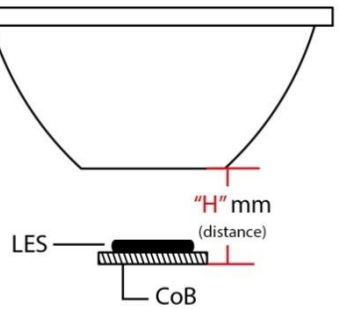

cd/klm

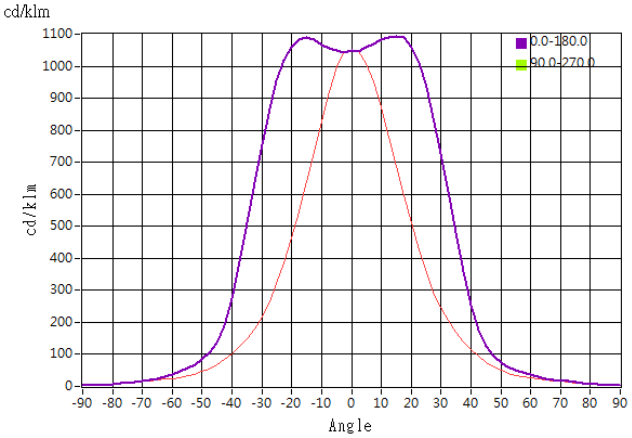

Illuminance At Distances

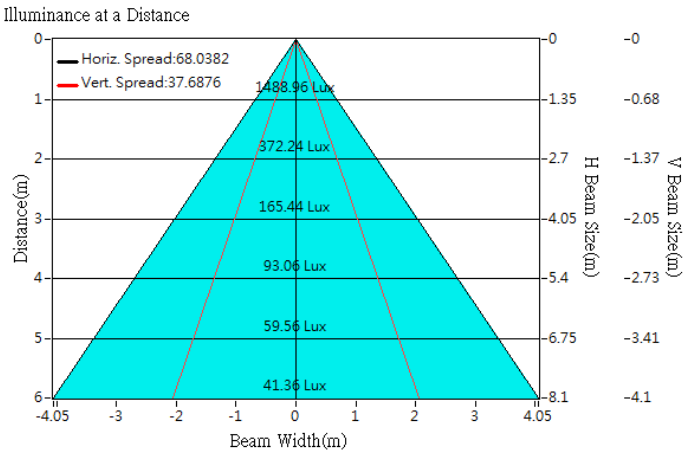

Chun Kuang Optics Corp.
5F.,No. 122-8, Jhonghua Rd, Hukou Township, Hsinchu County 303 , Taiwan
TEL : +886-3-6960168 / FAX : +886-3-6960228 / E-mail: sales@ckoptics.com

2019/6/3

Optical Characteristics

Model Number	CKO-CH15-045021-1670	
LED	**S9 GW KAFJB3.EM**	
LES / LED Size	Φ 9.8 mm	
FWHM (D50)	37°x67°	
Field Angle (D10)	80°x92°	
H (distance)	2.5mm	
Dimension	Φ =45 mm, Thickness=20.9 mm	
Luminous Flux	1241 lm	Measured @ 14.2 W
Material	PC / UL94V2	

"H" definition

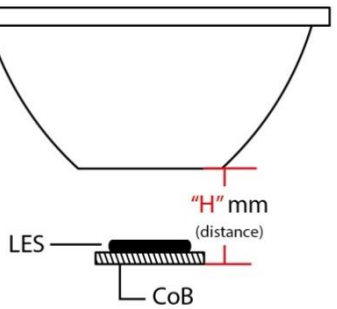

cd/klm

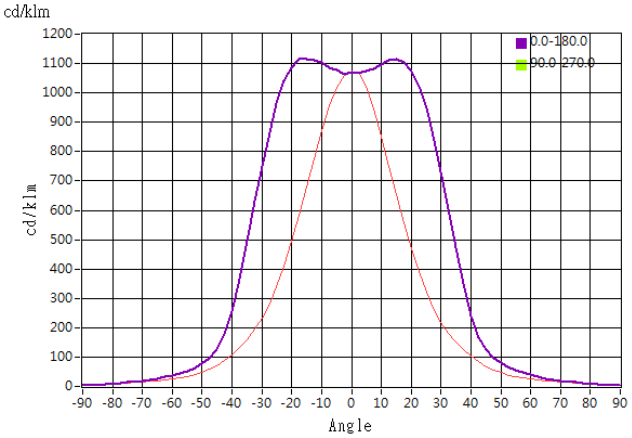

Illuminance At Distances

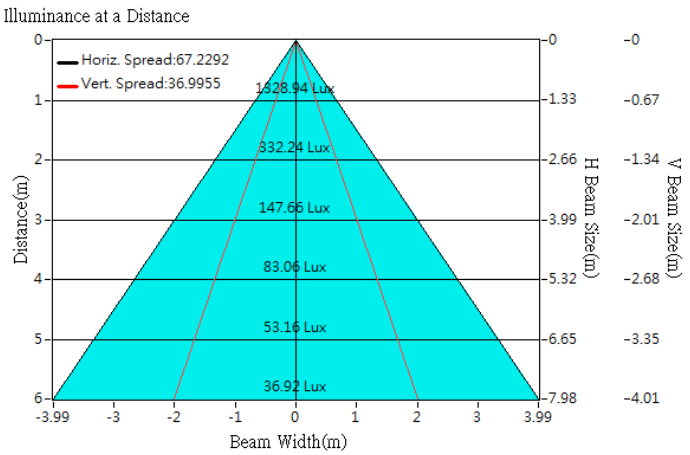

Chun Kuang Optics Corp.
2019/6/3
5F.,No. 122-8, Jhonghua Rd, Hukou Township, Hsinchu County 303 , Taiwan
TEL : +886-3-6960168 / FAX : +886-3-6960228 / E-mail: sales@ckoptics.com